Dart Aerospace Ltd.
1270 Aberdeen St
Hawkesbury, ON
K6A 1K7
Canada

Tel (613) 632-5200
Fax 613 632-5246

D4102-2

Job Sheet 194192

Part No: D4102-2
Part Name: Shim
Part Weight: 0 lbs
Job Created: 4/26/19
Due Date: 5/10/19
Type: SOLD

Job Qty: 2 pcs

Order 3877

Status: New
Job Tracking No:
Created By: Jennifer Renwick
Description:

Priority: Medium

Note: DWG REV B SHEET 2 IPP REV:A NEW ISSUE 10-07-05 JLM VERIFIED BY:DD
Ship Via:

Bill of Materials

Job Routing

Op No	Operation	Qty	Start Date	Due Date	Standard Setup Hrs	Standard Run Hrs	Workcenter/Supplier	Lead Time	Sign-off
100	**Bandsaw - 1**	2 pcs		5/10/19	0.00	0.04	Bandsaw - 1		B.e 19-05-05
110	**HAAS 4 Axis - B4B**	2 pcs		5/10/19	0.00	0.67	HAAS - 1 - B4B		
							HAAS - 2 - B4B		
							HAAS - 3 - B4B		
							HAAS - 4 - B4B		B.e 19-05-05
120	**QC 2**	2 pcs		5/10/19	0.00	0.00	QC 2 - 1		
							QC 2 - 12		
							QC 2 - 14		
							QC 2 - 17		
							QC 2 - 19		
							QC 2 - 2		
							QC 2 - 20		
							QC 2 - 22		
							QC 2 - 23		
							QC 2 - 25		
							QC 2 - 32		
							QC 2 - 33		
							QC 2 - 35		
							QC 2 - 39		
							QC 2 - 4		
							QC 2 - 40		
							QC 2 - 44		
							QC 2 - 45		
							QC 2 - 48		
							QC 2 - 49		
							QC 2 - 50		
							QC 2 - 51		
							QC 2 - 52		
							QC 2 - 57		
							QC 2 - 62		
							QC 2 - 63		
							QC 2 - 8		B.e 19-05-05
							QC 2 - 66		
							QC 2 - 64		
							QC 2 - 65		
							QC 2 - 5		
							QC 2 - 71		
130	**QC 8**	2 pcs		5/10/19	0.00	0.00	QC 8 - 12		
							QC 8 - 14		JmL 19/05/10
							QC 8 - 17		
							QC 8 - 20		

DART AEROSPACE

Dart Aerospace Ltd.
1270 Aberdeen Street
Hawkesbury, ON K6A 1K7
CANADA
TEL.: 1 613 632-5200
Email: sales@dartaero.com
www.dartaerospace.com

Container No: S180386

Part: D4102-2
Job No: 194192
Serial No/Batch: S180386
Revision:
Inspector:
Exp Date:
Instructions: Various STC's

Date: 05/10/19

					QC 8 - 25	
					QC 8 - 3	
					QC 8 - 32	
					QC 8 - 33	
					QC 8 - 35	
					QC 8 - 39	
					QC 8 - 4	
					QC 8 - 44	
					QC 8 - 45	
					QC 8 - 49	
					QC 8 - 58	
					QC 8 - 8	
					QC 8 - 9	
					QC 8 - 68	
					QC 8 - 67	
					QC 8 - 1 (A)	
					QC 8 - 47	
					QC 8 - 40	
					QC 8 - 52	
					QC 8 - 23	
140	**Handfinish - 1-1 Chemical-B4B**	2 pcs	5/10/19	0.00 0.06	Handfinish - 1 - 1 - B4B	
					Handfinish - 1 - 2 - B4B	
					Handfinish - 1 - 3 - B4B	
					Handfinish - 1 - 4 - B4B	
					Handfinish - 1 - 5 - B4B	
					Handfinish - 1 - 6 - B4B	
					Handfinish - 1 - 7 - B4B	
					Handfinish - 1 - 8 - B4B	
					Handfinish - 1 - 9 - B4B	
					Handfinish - 1 - 10 - B4B	P.R 19/05/13
					Handfinish - 1 - 11 - B4B	
					Handfinish - 1 - 12 - B4B	
					Handfinish - 1 - 13 - B4B	
					Handfinish - 1 - 14 - B4B	
					Handfinish - 1 - 15 - B4B	
					Handfinish - 1 - 16 - B4B	
					Handfinish - 1 - 17 - B4B	
					Handfinish - 1 - 18 - B4B	
					Handfinish - 1 - 19 - B4B	
					Handfinish - 1 - 20 - B4B	
					Handfinish - 1 - 21 - B4B	
					Handfinish - 1 - 22 - B4B	
150	**QC 3**	2 pcs	5/10/19	0.00 0.00	QC 3 - 10	
					QC 3 - 13	
					QC 3 - 15	
					QC 3 - 17	
					QC 3 - 18	
					QC 3 - 2	
					QC 3 - 28	
					QC 3 - 3	
					QC 3 - 30	
					QC 3 - 34	
					QC 3 - 36	
					QC 3 - 41	
					QC 3 - 51	
					QC 3 - 58	
					QC 3 - 59	
					QC 3 - 68	
					QC 3 - 9	

DAS 40 9-89

				QC 3 - 40	MAY 1 3 2019 9-89
				QC 3 - 19	
160 **Packaging 3-1 - Stock - B4B**	2 pcs	5/10/19	0.00 0.00	Packaging 3 - 1 - B4B	
				Packaging 3 - 2 - B4B	
				Packaging 3 - 3 - B4B	
				Packaging 3 - 4 - B4B	
				Packaging 3 - 5 - B4B	
				Packaging 3 - 6 - B4B	
				Packaging 3 - 7 - B4B	
				Packaging 3 - 8 - B4B	
				Packaging 3 - 9 - B4B	
				Packaging 3 - 10 - B4B	
				Packaging 3 - 11 - B4B	
				Packaging 3 - 12 - B4B	
				Packaging 3 - 13 - B4B	
				Packaging 3 - 14 - B4B	
				Packaging 3 - 15 - B4B	
				Packaging 3 - 16 - B4B	
				Packaging 3 - 17 - B4B	
				Packaging 3 - 18 - B4B	
				Packaging 3 - 19 - B4B	
				Packaging 3 - 20 - B4B	
				Packaging 3 - 21 - B4B	
				Packaging 3 - 22 - B4B	
				Packaging 3 - 23 - B4B	
				Packaging 3 - 24 - B4B	
				Packaging 3 - 25 - B4B	
				Packaging 3 - 26 - B4B	
				Packaging 3 - 27 - B4B 5to76	MAY 1 3 2019
				Packaging 3 - 28 - B4B	
				Packaging 3 - 29 - B4B	
				Packaging 3 - 30 - B4B	
				Packaging 3 - 31 - B4B	
				Packaging 3 - 32 - B4B	
				Packaging 3 - 33 - B4B	
				Packaging 3 - 34 - B4B	
				Packaging 3 - 35 - B4B	
				Packaging 3 - 36 - B4B	
170 **QC 21 - SA**	2 pcs	5/10/19	0.00 0.00	QC 21 - SA - 21	MAY 1 3 2019
				QC 21 - SA - 70	21
				QC 21 - SA - 53	9-89

Part Op Descriptions:
100 - (Bandsaw) Cut blanks as per folio 4.950" long
110 - (HAAS CNC Vertical Machine) MILL AS PER DWG AND FOLIO FA945 FOLIO REV:_____ DWG REV:_____ DEBURR
120 - QC2- Inspect parts off machine FAI/FAIB
130 - QC8- Inspect parts - second check
140 - Chemical Conversion Coat per QSI005 4.1
150 - QC3- Inspect Part Finish
160 - Identify as per dwg & Stock Location:_____
170 - QC21- Final Inspection - Work Order Release

Job BOM

Part / Item	Component Name	Quantity	Operation	Container
M6061T6B0.250X04.000	M2024T3B0.250X4.500	~~.0840 ft (.042 ea)~~ 0.84ft (0.420 ea)	100-Bandsaw - 1	5080897

Job Allocations

Operation	Component Part	Required	Inventory	Allocated
100-Bandsaw - 1	M6061T6B0.250X04.000	0	30	0

Part Specifications

Specifications could not be found.

Plex 4/26/19 12:53 PM Dart.Renwick.Jennifer

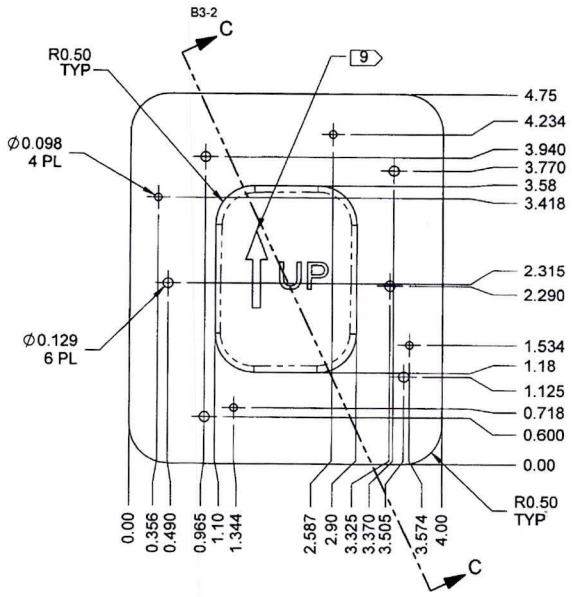

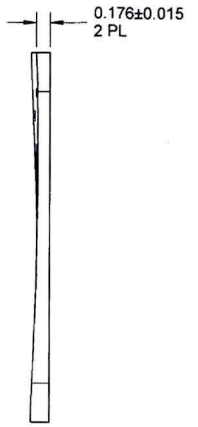

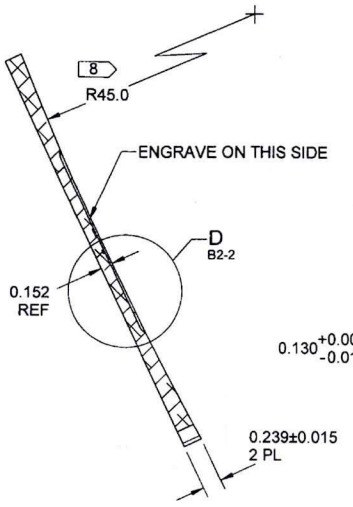

SECTION C-C D7-2

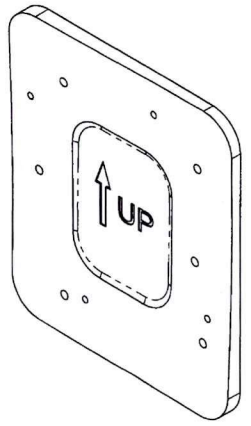

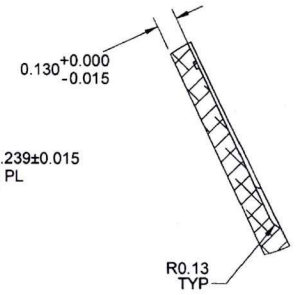

DETAIL D C3-2
SCALE 2X

D4102-2 SHIM B

NOTES:
1) MATERIAL: 6061-T6/T651/T6510/T6511/T62 ALUMINUM BAR
QQ-A-225/8 OR AMS-QQ-A-225/8 (OR AMS 4117/4128/4115/4116)
OR QQ-A-200/8 OR AMS-QQ-A-200/8 (OR AMS 4160)
OR ASTM B211 OR ASTM B221
PER DART SPEC. M6061T6B
2) FINISH: CHEMICAL CONVERSION COAT PER DART QSI 005 4.1
3) TOLERANCES: PER DART QSI 018 UNLESS OTHERWISE NOTED
4) UNITS: INCHES UNLESS OTHERWISE NOTED
5) BREAK SHARP EDGES: 0.005 TO 0.010 MAX
6) IDENTIFICATION: IDENTIFY WITH DART P/N "D4102-2" & B/N USING FINE POINT PERMANENT INK MARKER
7) WEIGHT: 0.30 lbs
8) SURFACE FINISH MINIMUM 250 MICROINCH
9) ENGRAVE "UP & ARROW" TO A DEPTH OF MAXIMUM 0.020 IN THIS LOCATION WITH A TOOL TIP RADIUS OF 0.063

RELEASED
2010 -08- 23

DESIGN	RF	DART AEROSPACE LTD
DRAWN	RF	HAWKESBURY, ONTARIO, CANADA
CHECKED		DRAWING NO. D4102 REV. B
MFG. APPR.		SHEET 2 OF 3
APPROVED		TITLE SHIM SCALE NTS
DE APPR.		
DATE	10.08.06	

COPYRIGHT © 2010 BY DART AEROSPACE LTD
THIS DOCUMENT IS PRIVATE AND CONFIDENTIAL AND IS SUPPLIED ON THE EXPRESS CONDITION THAT IT IS NOT TO BE USED FOR ANY PURPOSE OR COPIED OR COMMUNICATED TO ANY OTHER PERSON WITHOUT WRITTEN PERMISSION FROM DART AEROSPACE LTD.

DART AEROSPACE LTD	Work Order:	194192
Description: Shim	Part Number:	D4102-2
Inspection Dwg: D4102 Rev: B		Page 1 of 1

FIRST ARTICLE INSPECTION CHECKLIST

Drawing Dimension	Tolerance	Actual Dimension	Accept	Reject	Method of Inspection	Comments
0.356	+/-0.010	0.356	✓		H-G	31006
0.490	+/-0.010	0.490	✓		"	
0.965	+/-0.010	0.965	✓		"	
1.10	+/-0.030	1.095	✓		Vern	GA-13
1.344	+/-0.010	1.344	✓		H-G	31006
2.587	+/-0.010	2.587	✓		"	"
2.90	+/-0.030	2.900	✓		Vern	GA-13
3.325	+/-0.010	3.325	✓		H-G	31006
3.370	+/-0.010	3.370	✓		"	"
3.505	+/-0.010	3.505	✓		"	"
3.574	+/-0.010	3.574	✓		"	"
4.75	+/-0.030	4.749	✓		Vern	GA-13
4.234	+/-0.010	4.234	✓		H-G	31006
3.940	+/-0.010	3.940	✓		"	"
3.770	+/-0.010	3.770	✓		"	"
3.58	+/-0.030	3.590	✓		"	"
3.418	+/-0.010	3.418	✓		"	"
2.315	+/-0.010	2.315	✓		"	"
2.290	+/-0.010	2.290	✓		"	"
1.534	+/-0.010	1.534	✓		"	"
1.18	+/-0.030	1.160	✓		Vern	GA-13
1.125	+/-0.010	1.125	✓		H-G	31006
0.718	+/-0.010	0.718	✓		"	"
0.600	+/-0.010	0.600	✓		"	"
0.176	+/-0.015	0.172	✓		Vern	GA-13
0.239	+/-0.015	0.236	✓		"	"
0.130	+0.000/-0.015	0.127	✓		Mic	118-120
R0.13	+/-0.030	R0.125	✓		R-G	ref.
Ø0.098	+0.004/-0.001	ϕ0.099	✓		Vern	GA-13
Ø0.129	+0.005/-0.001	ϕ0.129	✓		"	"

Measured by:	B.A
Date:	19-05-05

Audited by:	
Date:	19/05/11

Preliminary Approval:	
Date:	

Rev	Date	Change	Revised by	Approved
A	10.10.07	New Issue	KJ	